# DS-1602ZJ

Wall Mount  Bracket Indoor/Outdoor

## Features:

- Aluminum alloy material with surface spray treatment
- General design for indoor/outdoor
- Better water proof design
- With safety rope, the assembling is safer and more convenient

## Dimension:

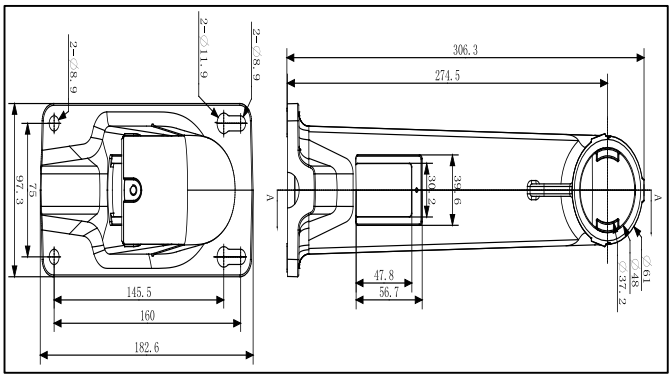


**Note: The actual bracket may vary from the picture above.**

## Order model:

DS-1602ZJ

## Parameters:

| Model / Parameter | DS-1602ZJ |
|---|---|
| | Wall Mount Bracket In/Outdoor |
| Color | Hik white |
| Feature | Suitable for speed dome pendent mounting |
| Material | Aluminum alloy |
| Dimension | 97X182X305mm |
| Weight | 1050g |

## Notice:

- The bracket should be installed on the flat surface of a wall
- The wall must be capable of supporting more than 3 times the total capacity of the camera and the bracket.